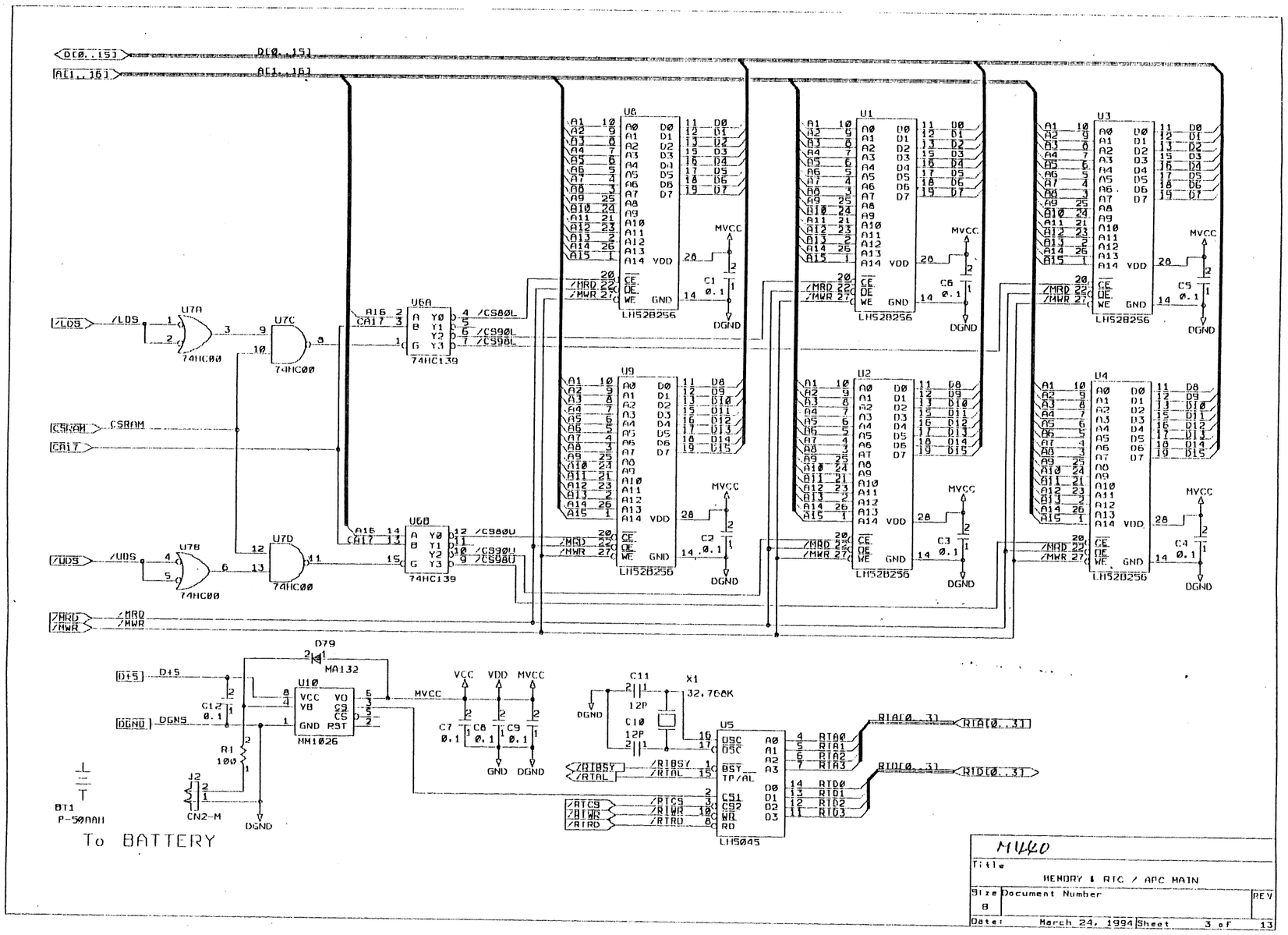
U6
U1
U3
U9
U2
U4
LH528256
U6A
U6B
74HC139
U7A
U7B
U7C
U7D
74HC00
74HC00
U10
MM1026
D79
MA132
U5
LH5045
X1
32.768K
BT1
P-50AAH
To BATTERY
M440
Title
MEMORY & RTC / APC MAIN
Size B
Document Number
REV
Date: March 24, 1994
Sheet 3 of 13

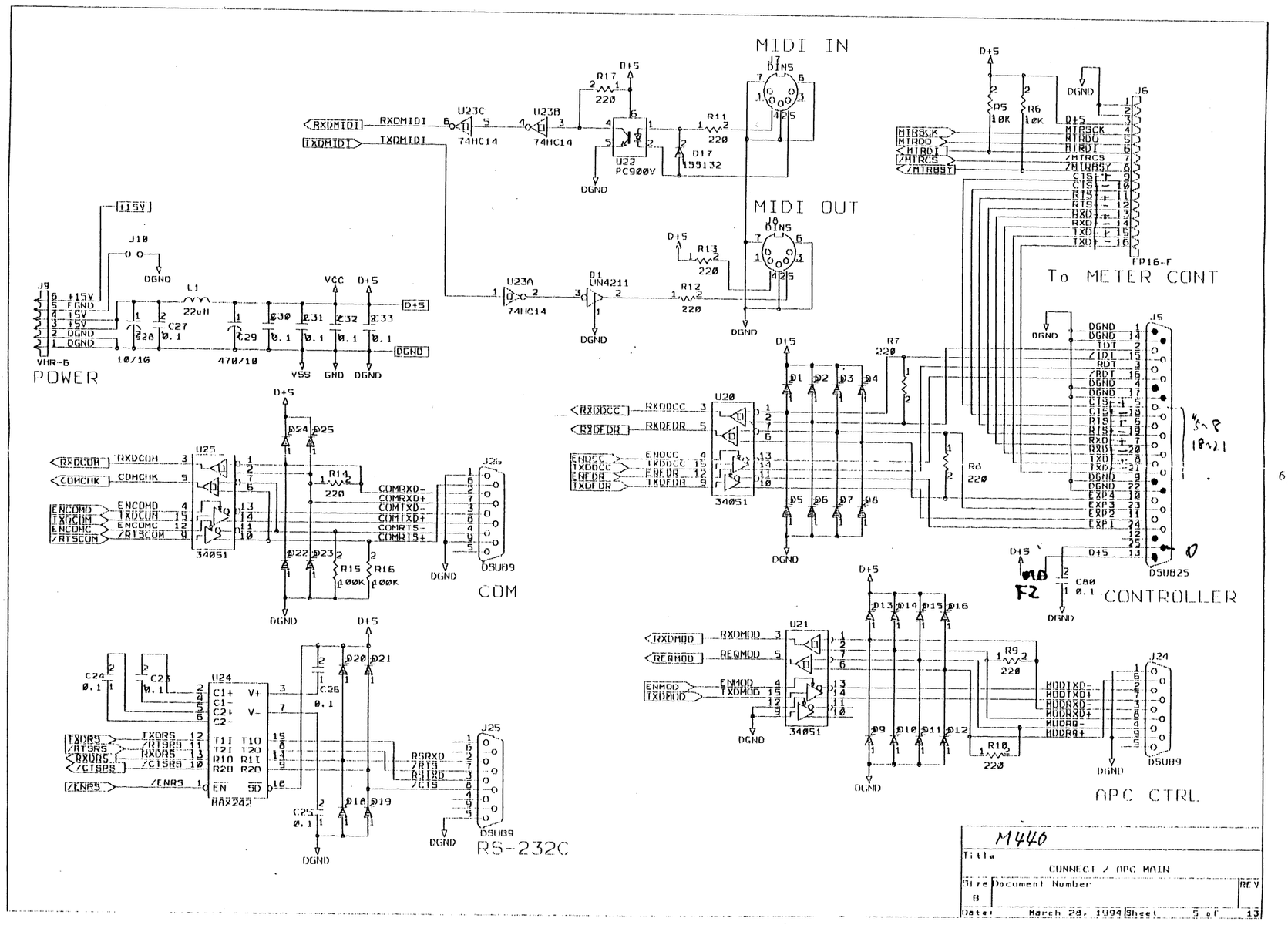
MIDI IN
MIDI OUT
U22
PC900V
U23C
U23B
U23A
74HC14
D1
1N4211
J7
DIN5
J8
DIN5
To METER CONT
FP16-F
POWER
VHR-6
COM
D9UB9
U25
34051
U20
34051
CONTROLLER
D9UB25
U21
34051
APC CTRL
D9UB9
U24
MAX242
RS-232C
D9UB9
M440
Title
CONNECT / APC MAIN
Size B
Document Number
REV
Date: March 23, 1994
Sheet 5 of 13

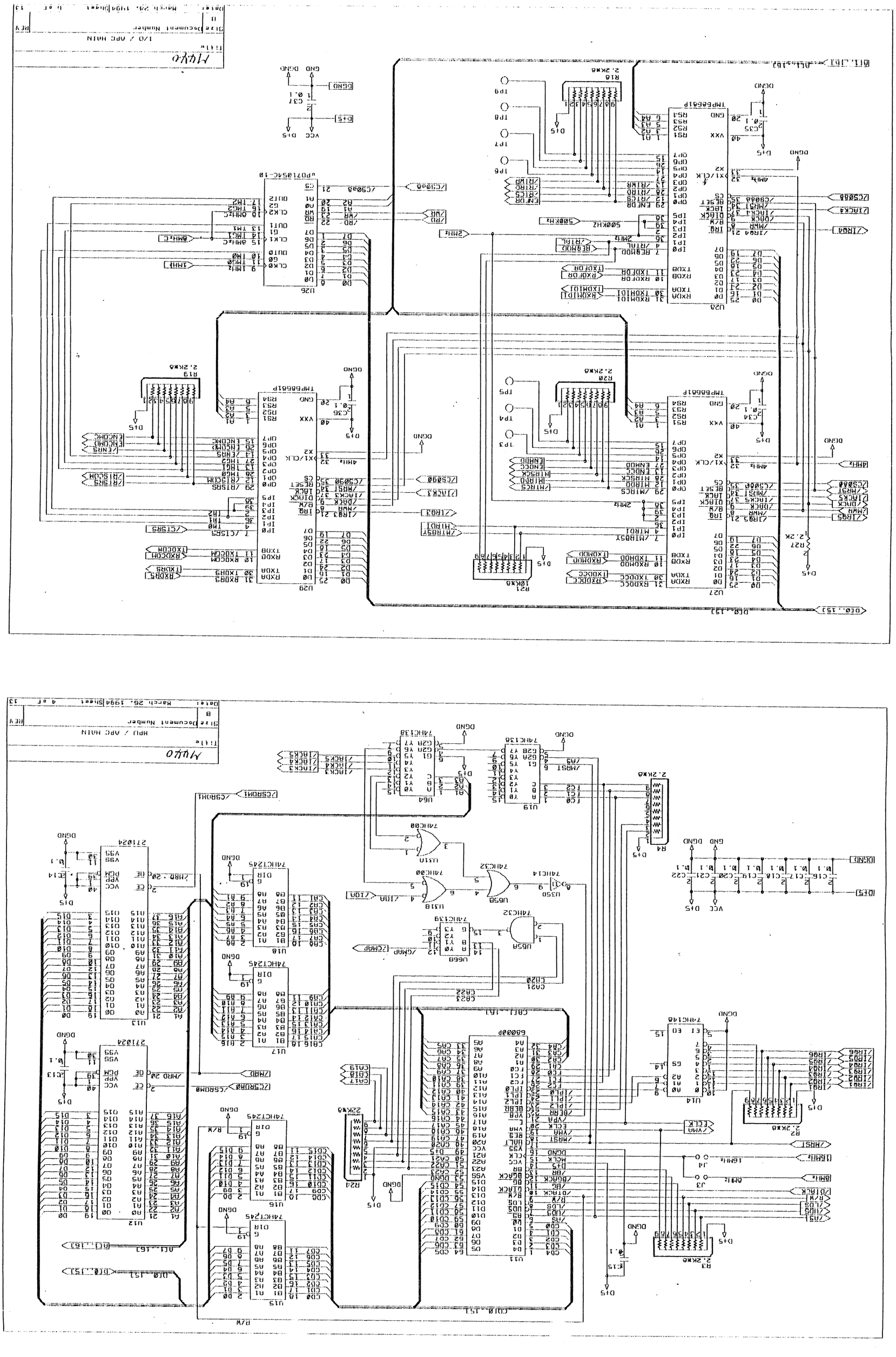
MUXO
I/O / APC MAIN
Size
Document Number
REV
B
Date: March 26, 1994
Sheet 4 of 13
U29
U27
U26
TMP68681P
AMIC
UPD71054C-10
U20
U19
U18
U17
U16
U15
U14
U13
U12
U11
U10
U9
U8
U7
U6
U5
U4
U3
U2
U1
R1
R2
R3
R4
R10
R19
R20
R21
R24
R27
C34
C35
C36
C37
C38
C39
C40
C41
C42
C43
C44
C45
C46
C47
C48
C49
C50
C51
C52
C53
C54
C55
C56
C57
C58
C59
C60
C61
C62
C63
C64
C65
C66
C67
C68
C69
C70
C71
C72
C73

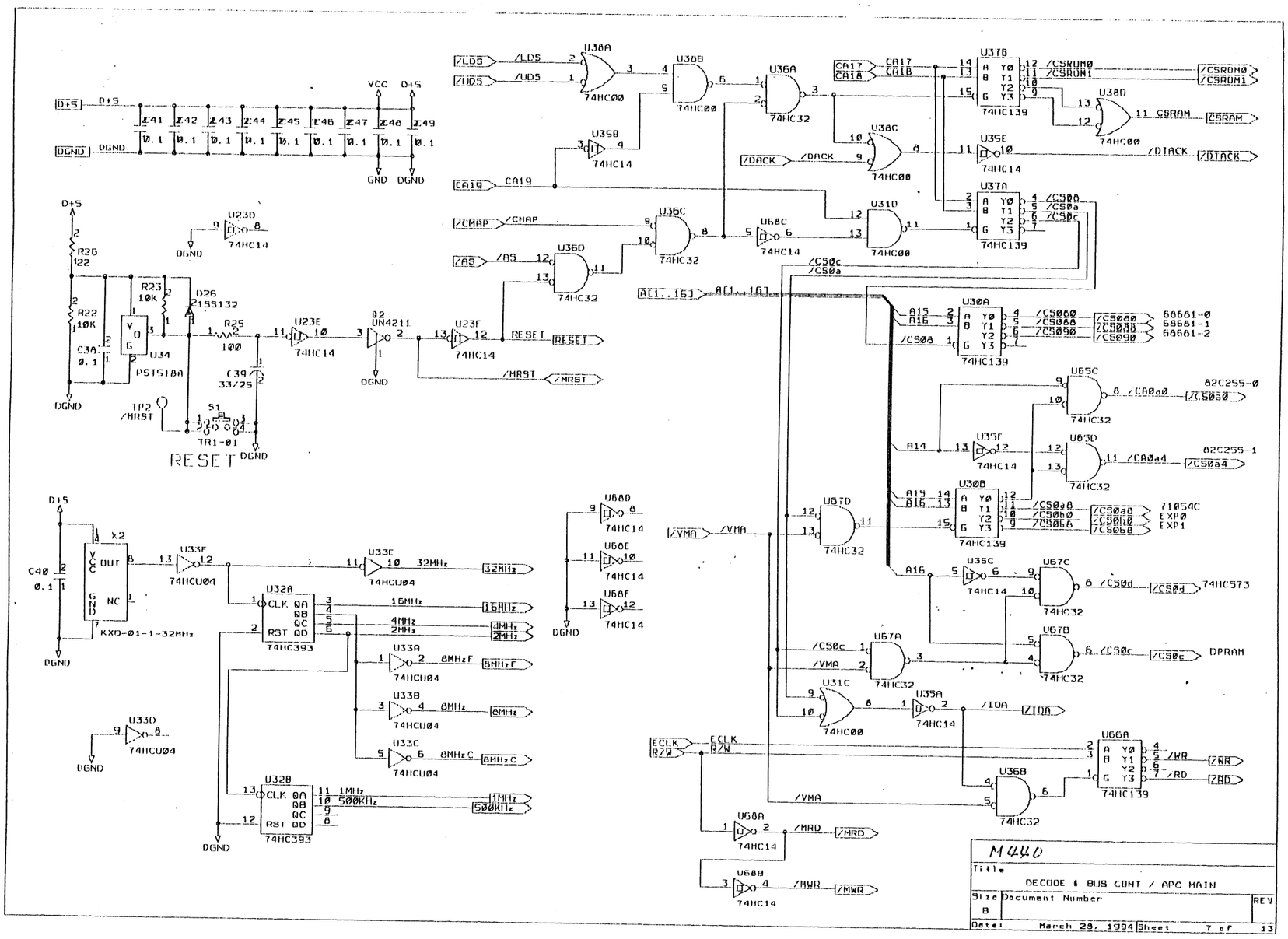
RESET
M440
Title
DECODE & BUS CONT / APC MAIN
Size B
Document Number
REV
Date: March 28, 1994
Sheet 7 of 13

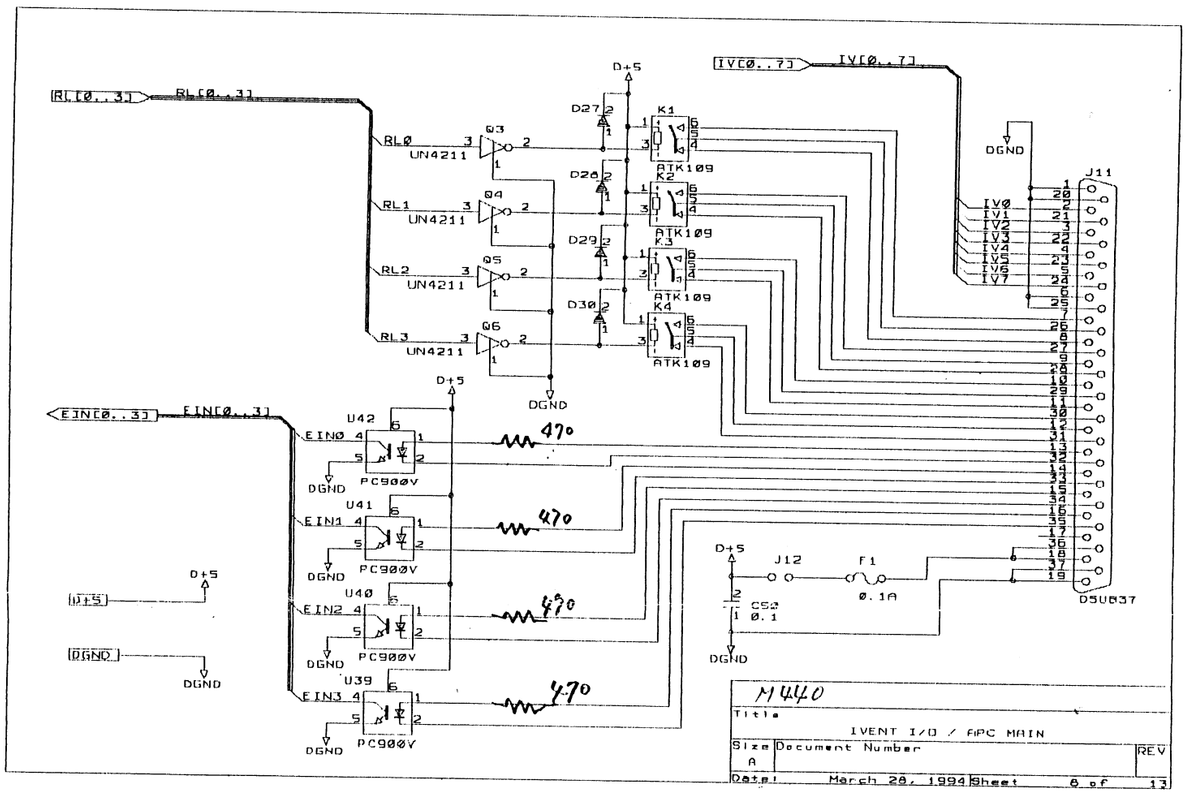
M440
Title
IVENT I/O / APC MAIN
Size A
Document Number
REV
Date: March 28, 1994
Sheet 6 of 13

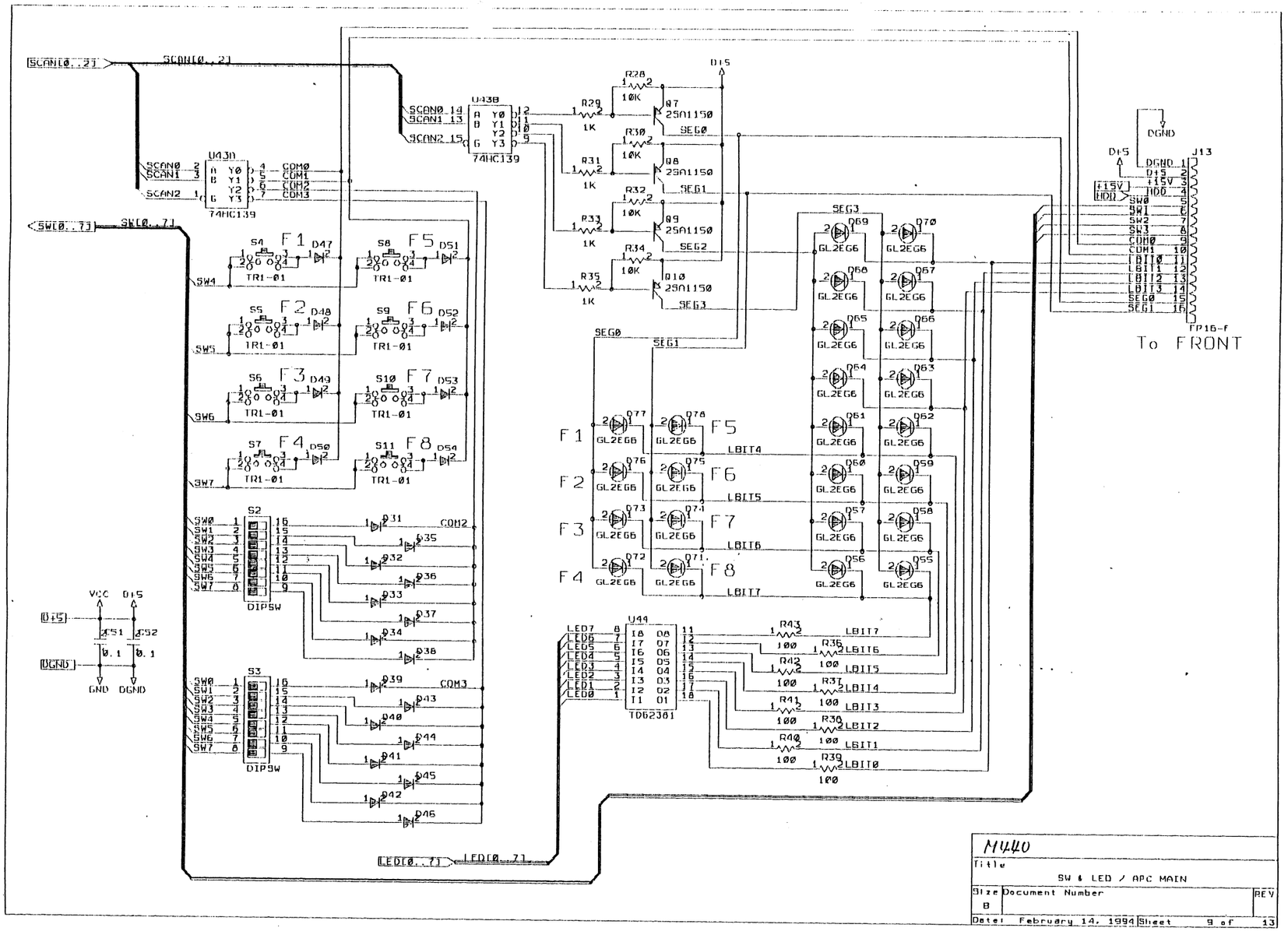
SCAN[0..2]
SW[0..7]
U43B
74HC139
U43D
74HC139
R28 10K
R29 1K
R30 10K
R31 1K
R32 10K
R33 1K
R34 10K
R35 1K
Q7 2SA1150 SEG0
Q8 2SA1150 SEG1
Q9 2SA1150 SEG2
Q10 2SA1150 SEG3
D+5
DGND
J13
FP16-F
To FRONT
F1 F2 F3 F4 F5 F6 F7 F8
S4 S5 S6 S7 S8 S9 S10 S11
TR1-01
GL2EG6
LBIT4
LBIT5
LBIT6
LBIT7
S2
S3
DIPSW
COM2
COM3
U44
TD62381
R43 100
R36 100
R42 100
R37 100
R41 100
R30 100
R40 100
R39 100
LED[0..7]
M440
Title
SW & LED / APC MAIN
Size B
Document Number
REV
Date: February 14, 1994
Sheet 9 of 13

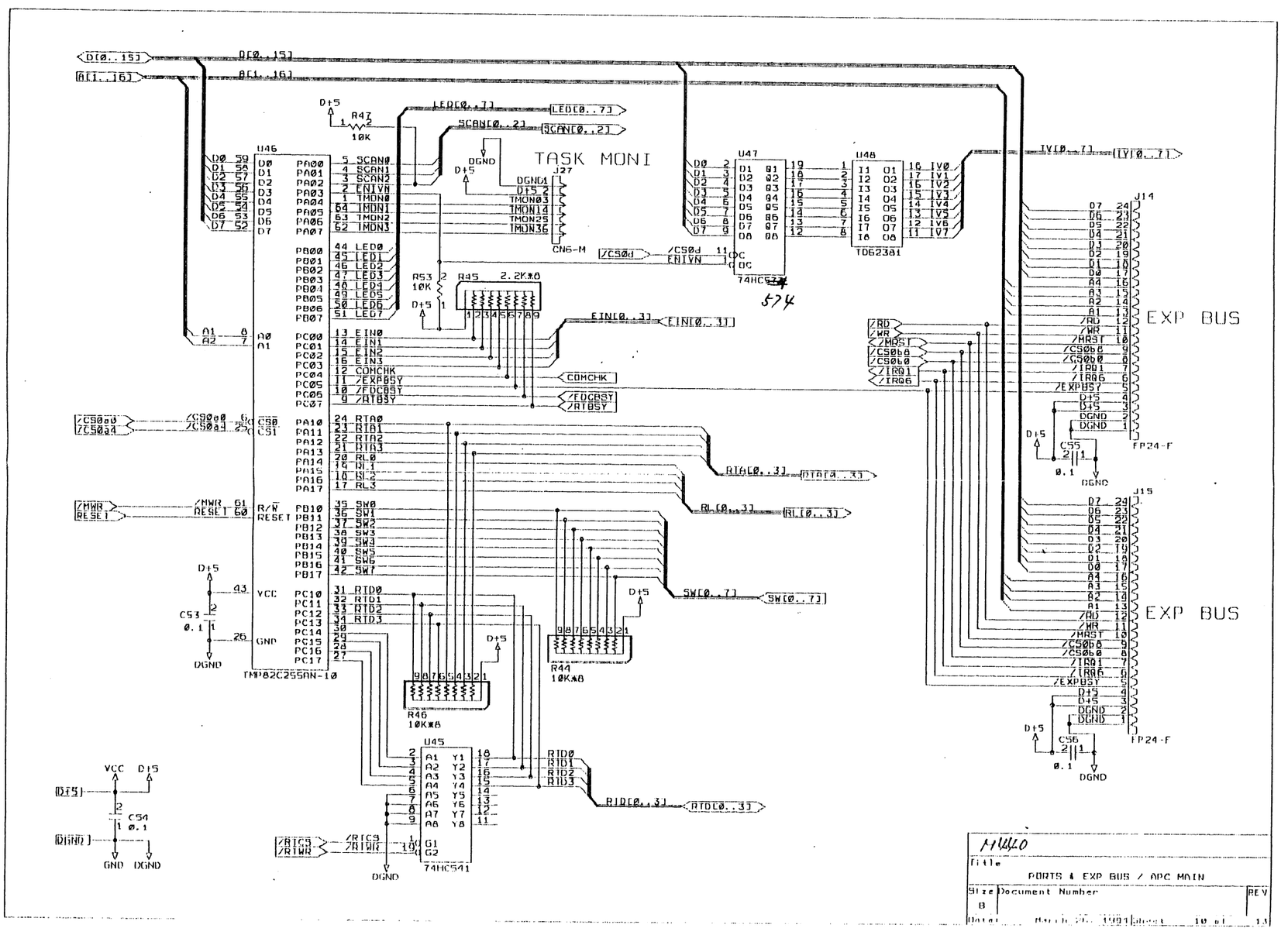
D[0..15]
A[1..16]
U46
TMP82C255AN-10
R47 10K
LED[0..7]
SCAN[0..2]
TASK MONI
J27
CN6-M
U47
74HC574
U48
TD62381
IV[0..7]
J14
FP24-F
EXP BUS
R53 10K
R45 2.2K*8
EIN[0..3]
COMCHK
FDCBSY
RTBSY
RTA[0..3]
RL[0..3]
SW[0..7]
R44 10K*8
R46 10K*8
U45
74HC541
RTD[0..3]
J15
M440
Title
PORTS & EXP BUS / APC MAIN
Size B
Document Number
REV
Date: March 25, 1994
Sheet 10 of 13

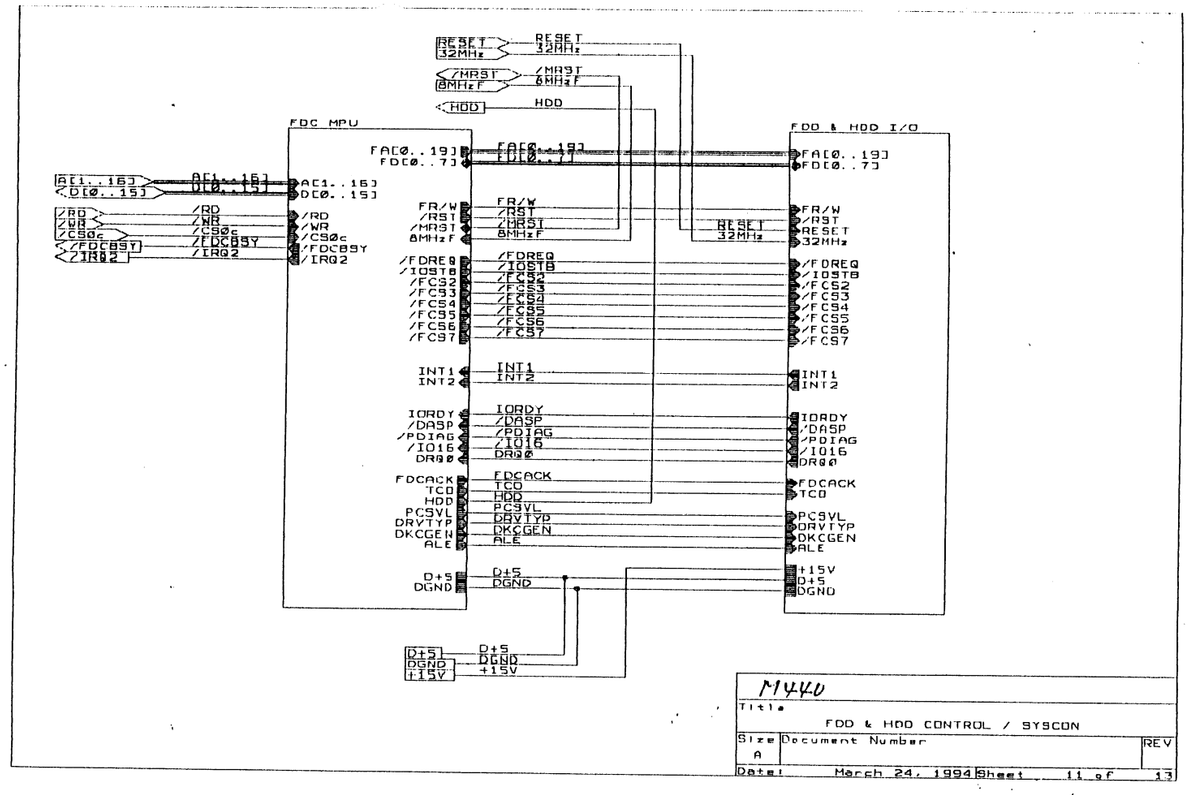
FDC MPU
FDD & HDD I/O
RESET
32MHz
/MRST
8MHzF
HDD
FA[0..19]
FD[0..7]
A[1..16]
D[0..15]
/RD
/WR
/CS0c
/FDCBSY
/IRQ2
FR/W
/RST
/FDREQ
/IOSTB
/FCS2
/FCS3
/FCS4
/FCS5
/FCS6
/FCS7
INT1
INT2
IORDY
/DASP
/PDIAG
/IO16
DRQ0
FDCACK
TCO
PCSVL
DRVTYP
DKCGEN
ALE
D+5
DGND
+15V
M440
Title
FDD & HDD CONTROL / SYSCON
Size
A
Document Number
REV
Date: March 24, 1994
Sheet 11 of 13

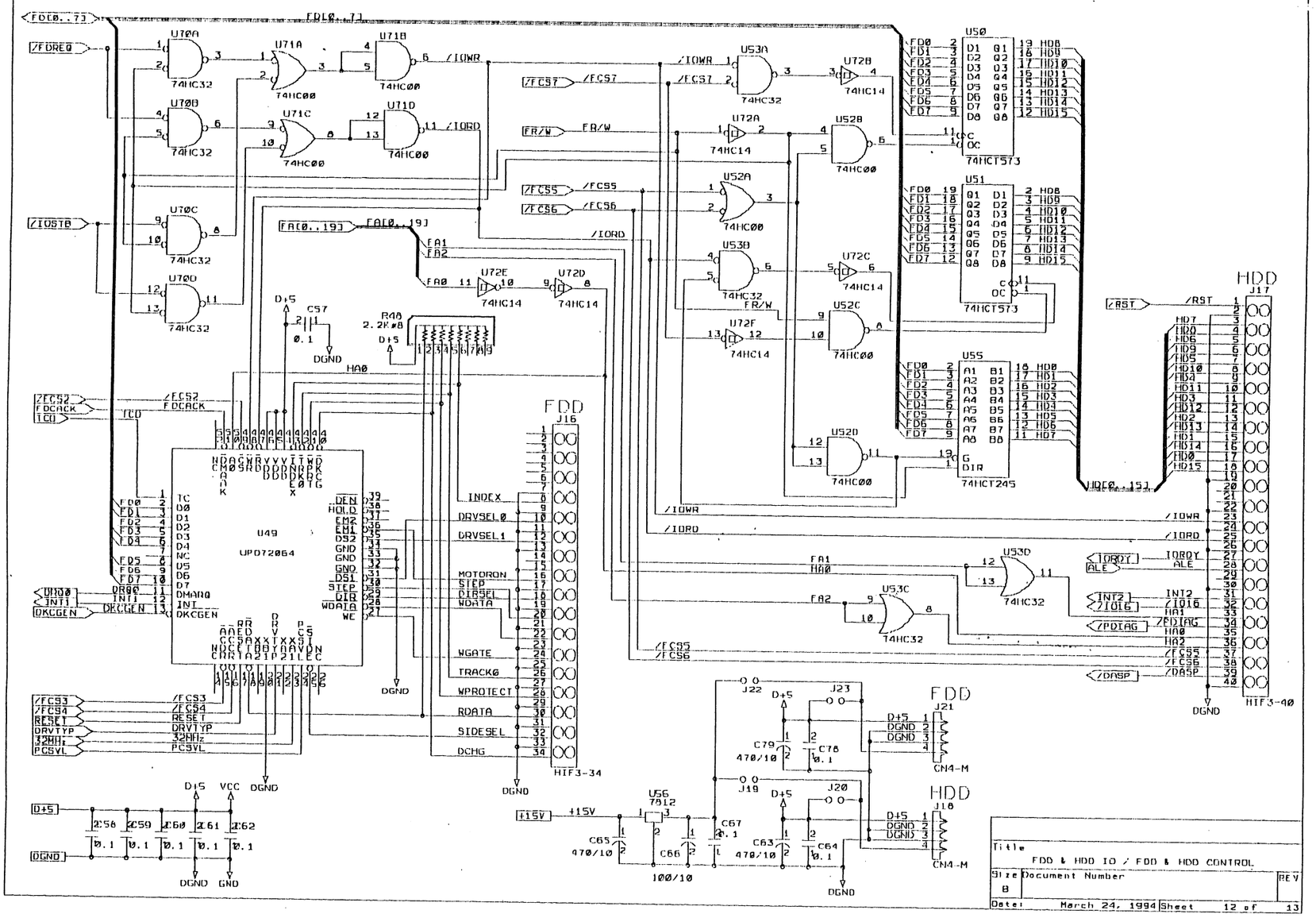
U49
UPD72064
FDD
J16
HTF3-34
HDD
J17
HTF3-40
U50
U51
U52
U53
U55
74HCT573
74HCT245
U56
7812
J21
J18
CN4-M
Title
FDD & HDD IO / FDD & HDD CONTROL
Size
B
Document Number
REV
Date: March 24, 1994
Sheet 12 of 13

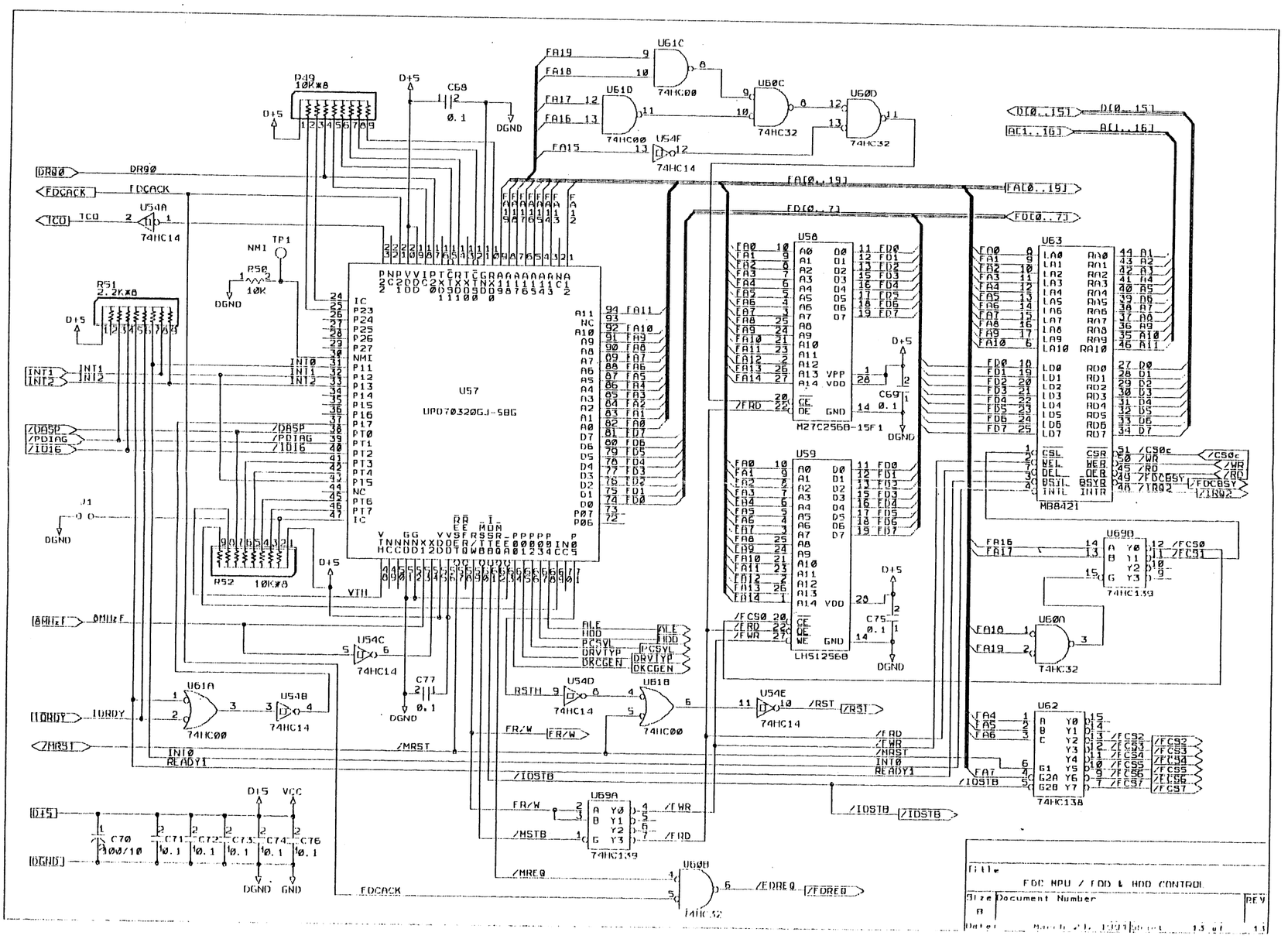
U57
UPD70320GJ-5BG
U58
M27C256B-15F1
U59
LH51256B
U63
MB8421
U62
74HC138
U60
74HC32
U61
74HC00
U54
74HC14
U69
74HC139
Title
FDC NPU / FDD & HDD CONTROL
Size
B
Document Number
REV
Date: March 24, 1994
Sheet 13 of 13

M440 SYSCON 最新

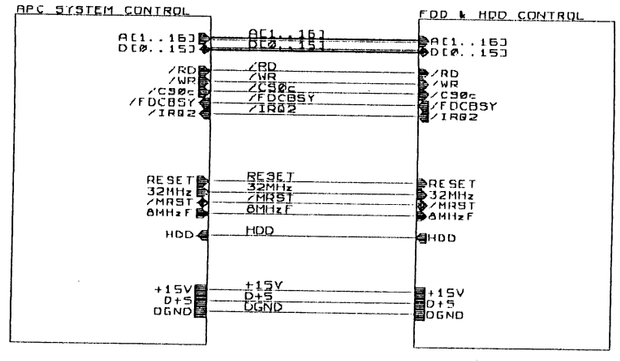

M440	
Title	LOOT / APC MAIN
Size A	Document Number
REV	
Date: March 24, 1994	Sheet 1 of 13

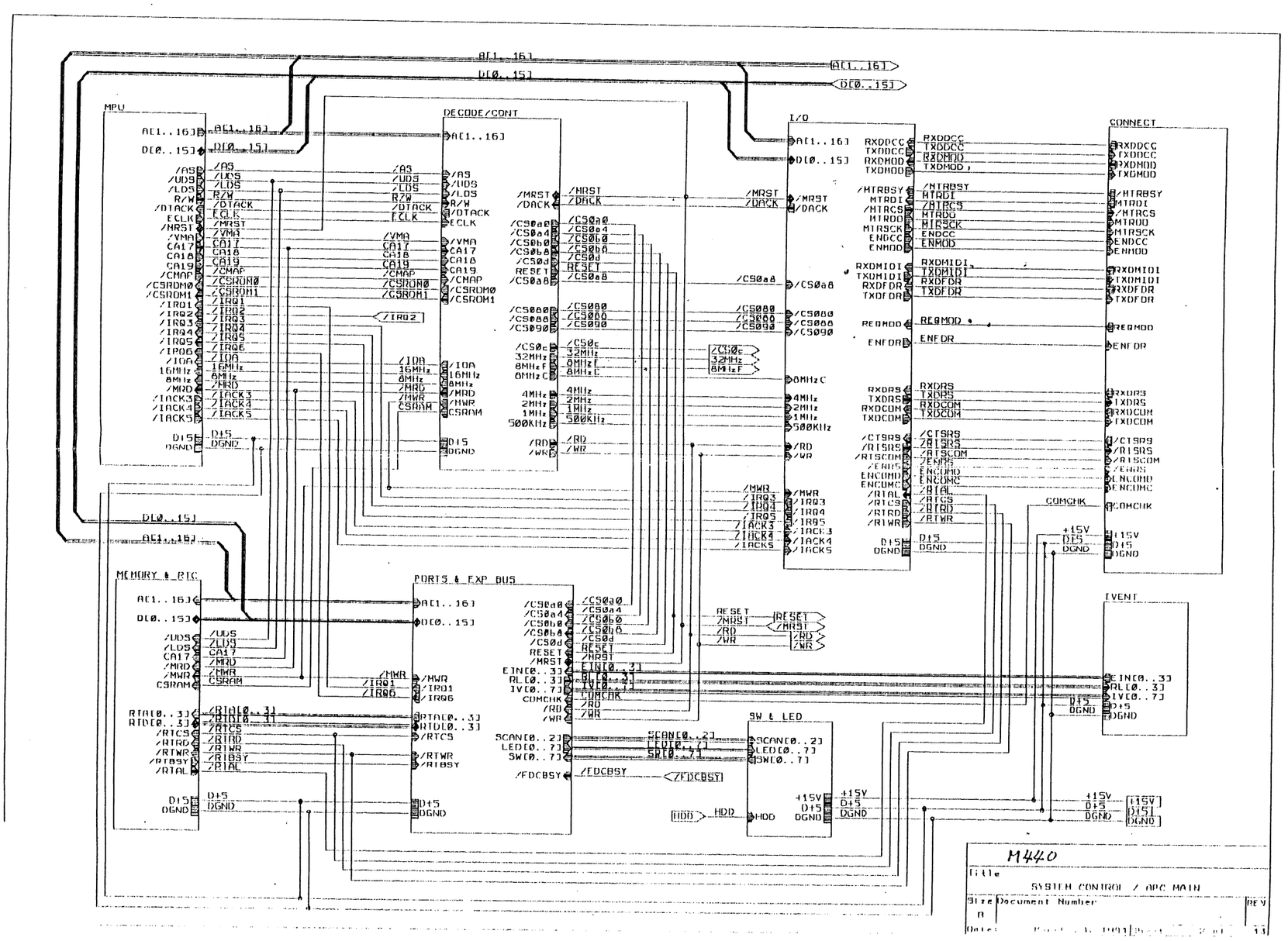

M440	
Title	SYSTEM CONTROL / APC MAIN
Size A	Document Number
REV	
Date:	Sheet 2 of 13